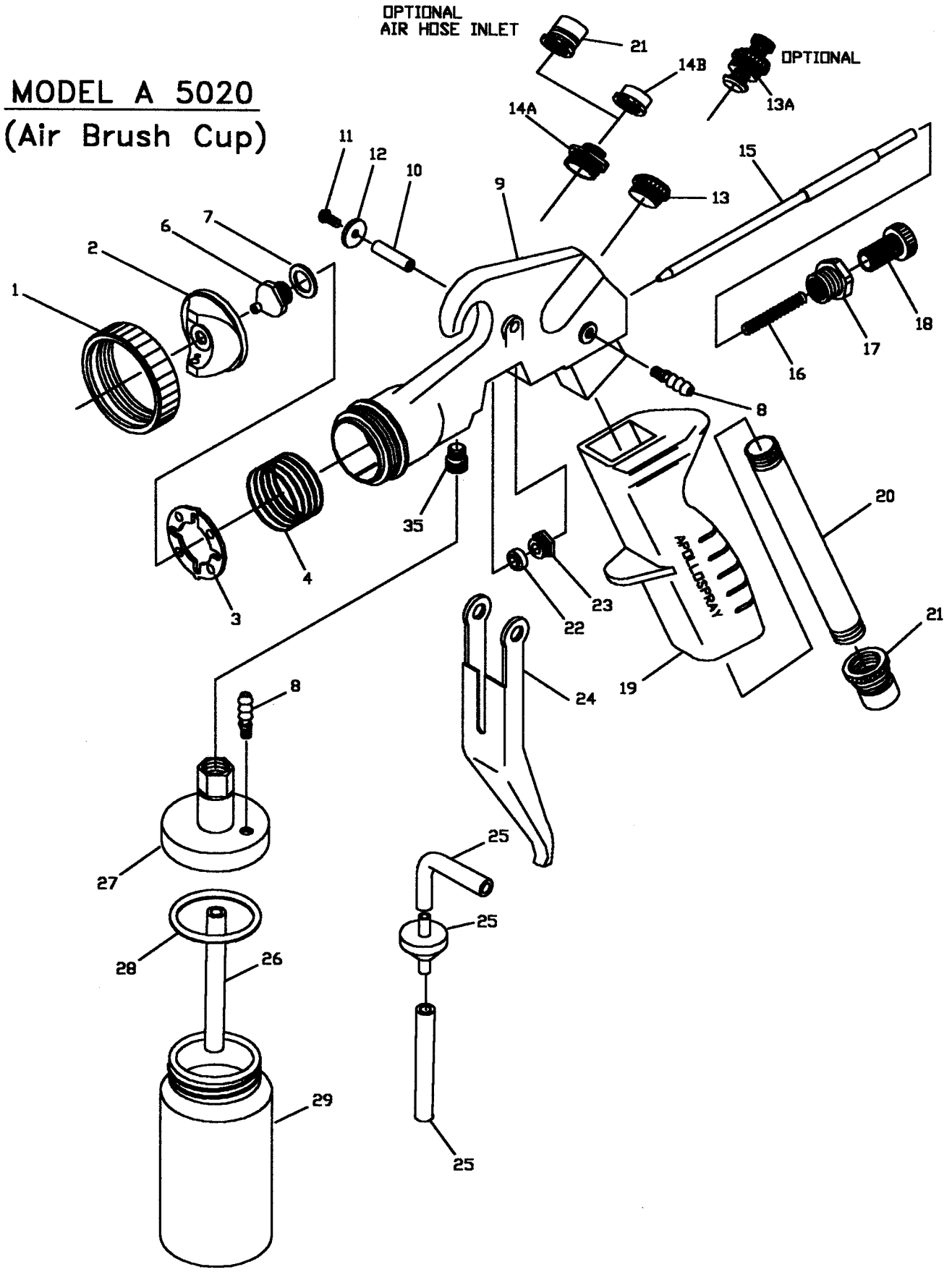MODEL A 5020
(Air Brush Cup)